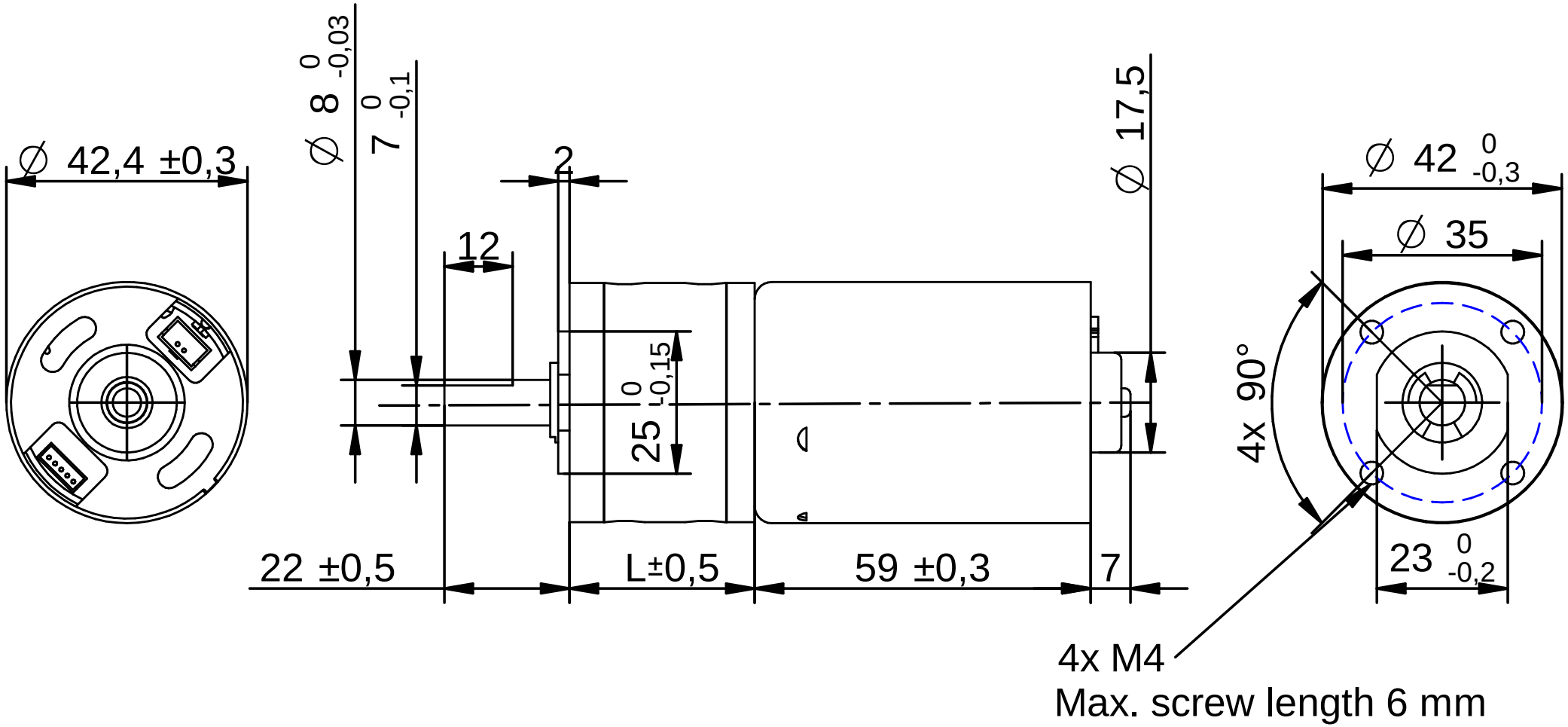

Gear Ratio	4:1	14:1	17:1	24:1	49:1	61:1	84:1	104:1	144:1	212:1	294:1	504:1	624:1	720:1	864:1	1062:1	1470:1	2500:1	3000:1	3600:1
L	32.5	39.2	39.2	39.2	45.9	45.9	45.9	59.2	45.9	52.6	52.6	59.9	59.9	59.9	59.9	59.9	59.9	59.9	59.9	59.9

Label

1 Article No.
Date: YY.MM.DD
www.transmotec.com

TRANSMOTEC
www.transmotec.com

Article No.	Base model				
PBTI4259					
Scale	Projection	Dimension units	Date	Rev. Date	Rev. No.
1:1		mm	2023-02-28		

Copyright

This drawing contains confidential information and is the property of Transmotec Sweden AB, without whose permission it may not be copied, shown or handed to a third party or otherwise used and is to be returned promptly upon request to the design owner, who is responsible for the drawing.