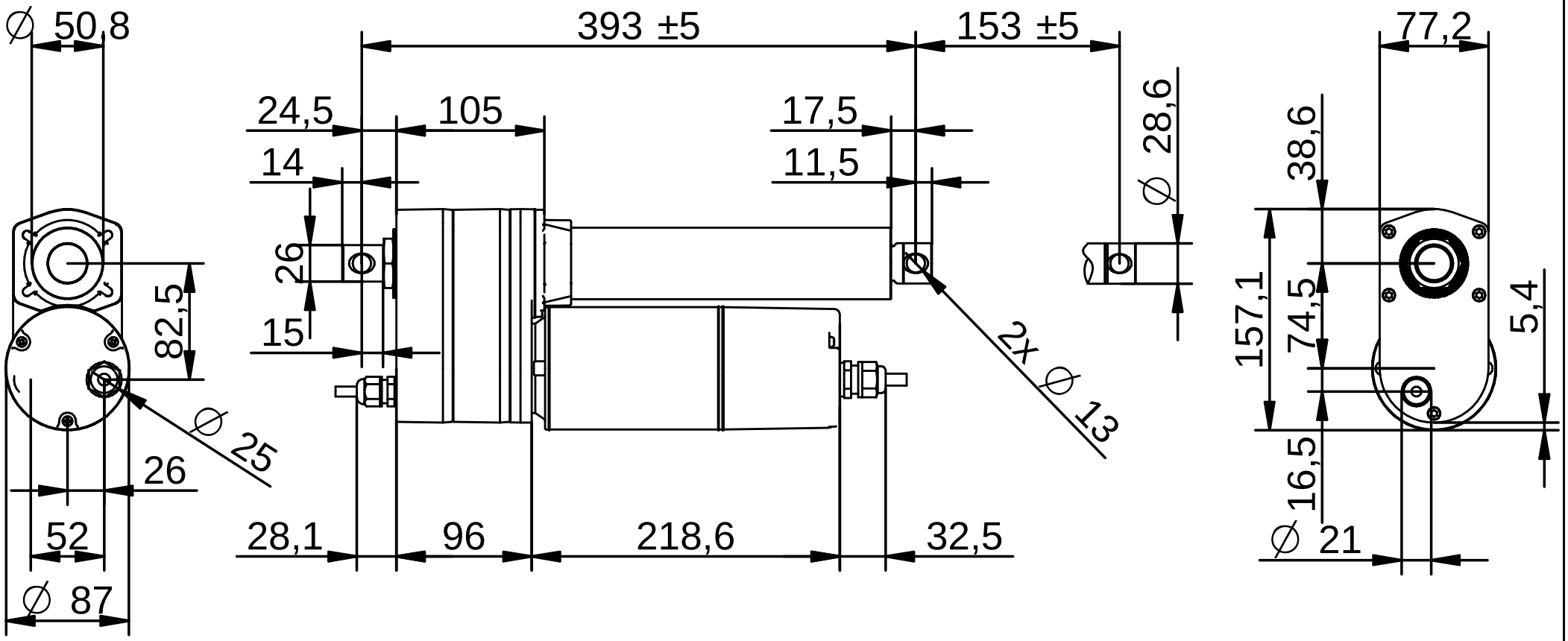

Label

1 Article No.
Date: YY.MM.DD
www.transmotec.com

TRANSMOTEC
www.transmotec.com

Article No.	Base model				
AMA-X-X-B-153-POT-IP65					
Scale	Projection	Dimension units	Date	Rev. Date	Rev. No.
1:4		mm	2024-11-29		

Copyright

This drawing contains confidential information and is the property of Transmotec Sweden AB, without whose permission it may not be copied, shown or handed to a third party or otherwise used and is to be returned promptly upon request to the design owner, who is responsible for the drawing.